COALBROOK

DV9120

DECIMAL DOUBLE VANITY UNIT
1190x560x459mm

DATE: 20/05/26 REVISION: B

TOP VIEW

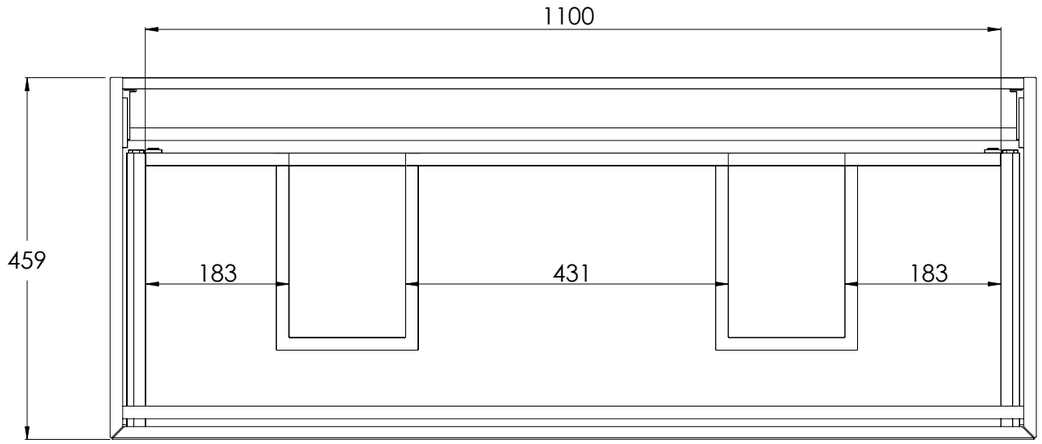

FRONT VIEW

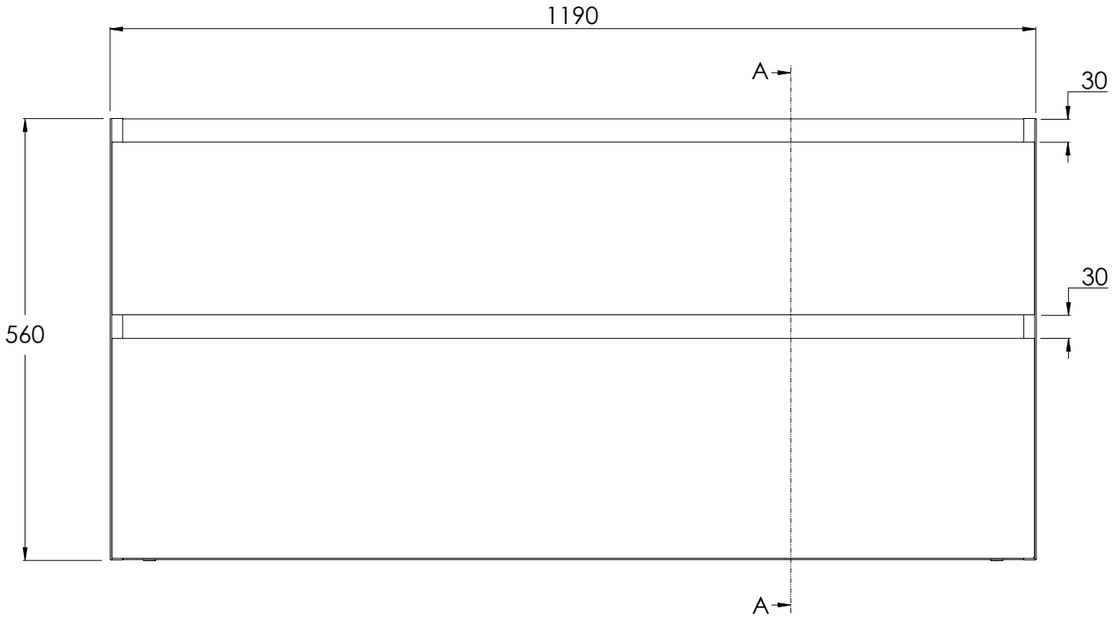

SECTION VIEW: A-A

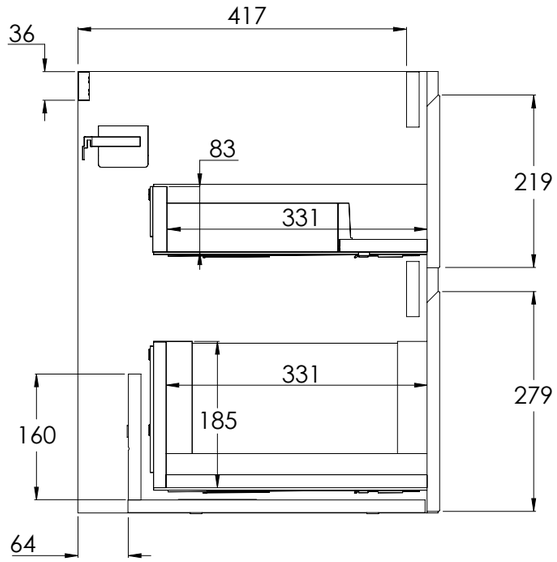

DIMENSIONS IN MILLIMETRES

WHILST EVERY EFFORT IS MADE TO ENSURE THE ACCURACY OF THESE DATA SHEETS THEY ARE SUBJECT TO CHANGE WITHOUT NOTICE AS PART OF THE COMPANY'S PRODUCT DEVELOPMENT PROCESS